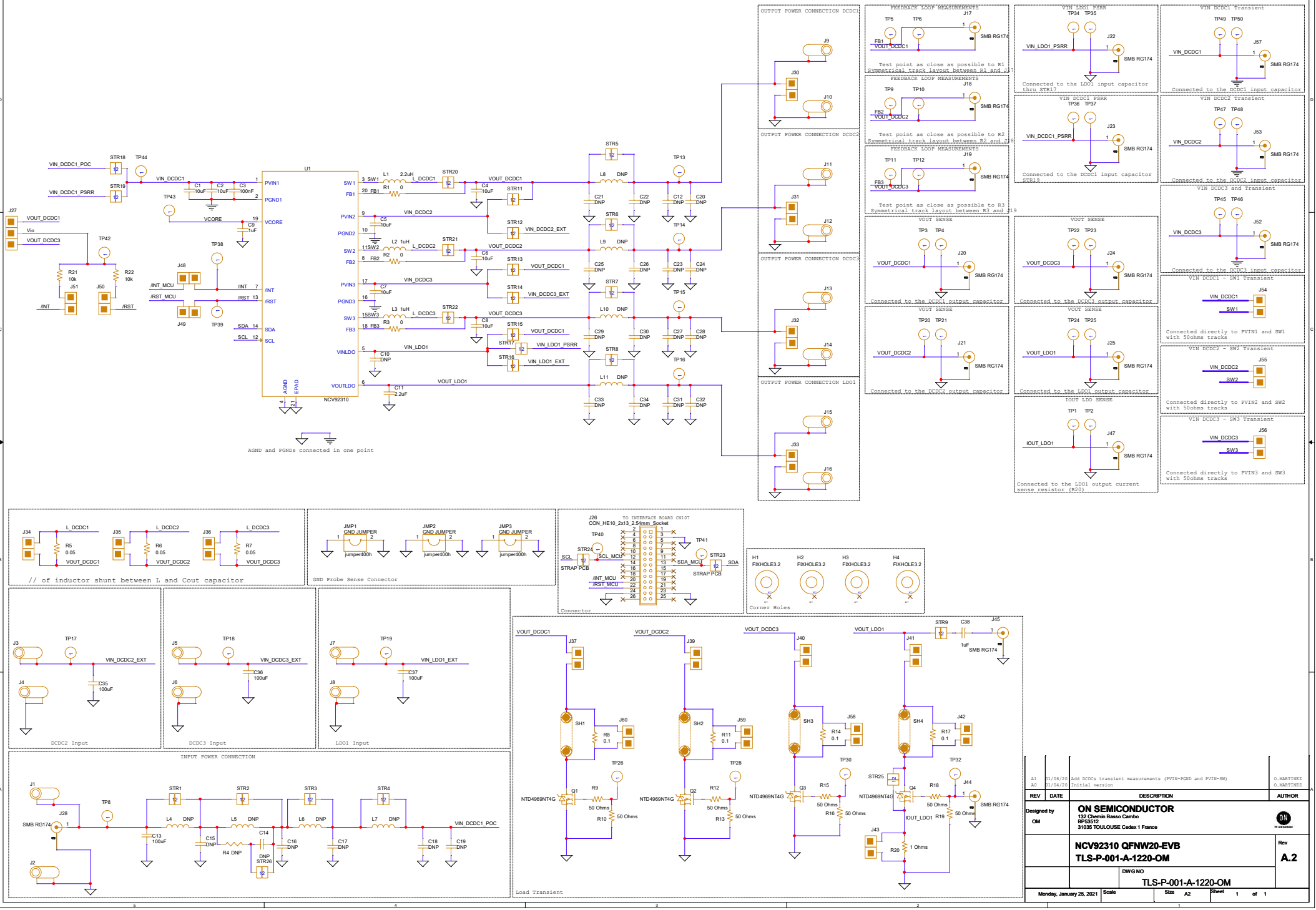

REV	DATE	DESCRIPTION	AUTHOR
A1	01/06/20	Add DCDCs transient measurements (PVIN-PGND and PVIN-SW)	O.MARTINEZ
A0	01/04/20	Initial version	O.MARTINEZ

Designed by OM

ON SEMICONDUCTOR
132 Chemin Basso Cambo
BP53512
31036 TOULOUSE Cedex 1 France

NCV92310 QFNW20-EVB
TLS-P-001-A-1220-OM

Rev **A.2**

DWG NO TLS-P-001-A-1220-OM

Monday, January 25, 2021 | Scale | Size A2 | Sheet 1 of 1